TEAR SHEET

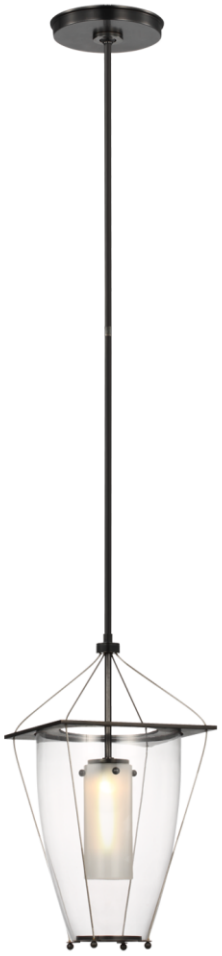

Ovalle 9" Lantern

Item # RB 5090BZ-CG

Designer: Ray Booth

O/A Height: 58.25"
Fixture Height: 16"
Min. Custom Height: 22.75"
Width: 8.75"
Canopy: 6.25" Round
Finishes: AB, AN, BZ
Glass Options: CG
Socket: E12 Candelabra
Wattage: 2.5 LED T6
Weight: 9 Pounds
Note: Custom Height Available

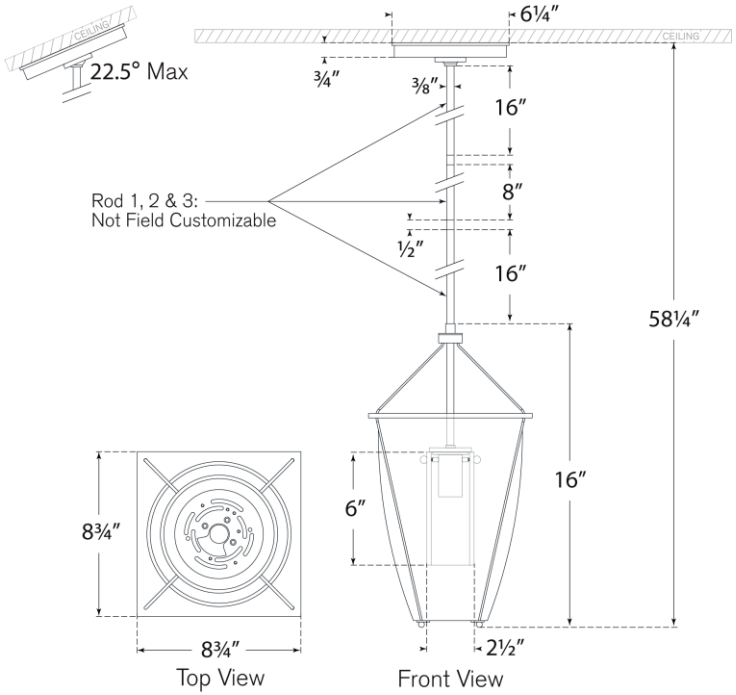

VISUAL COMFORT & CO.